100BASE-TX TRANSFORMER MODULES

Part NO:HX84001S

Features:

- Designed for Ethernet 100/1000 BASE-T.
- Supports 8 pairs of category 5 UTP cable.
- Cable interface for isolation and low common mode emissions.
- Compliant with IEEE 802.3 standard for 1000 BASE-T.
- Compliance with ROHS requirements
- Operating temperature range: -40℃ to +85℃.
- Storage temperature range: -55℃ to +125℃.

Specifications

Electrical Specification@25° C Operating Temperature -40℃ to +85℃							
Part NO	Trun Ratio(±2%		OCL primary@100KHz 0.1Vms 8mA	Leakage primary@10KHz 0.1Vms	Cww(Pri:Sec)	DCR(Ω)	
	TX	RX				Primary	Secondary
HX84001S	1CT:1CT	1CT:1CT	350uH Min	0.5uH max	35PF	0.9Max	1.2Max

Electrical Specification@25° C Operating Temperature -40℃ to +85℃									
Part NO	Insertion loss(dB max) 1-100MHz	Return Loss(db min)MHz				DMRR(dB min)MHz		Crosstalk(dB min)MHz	Isolation Voltage(Vrms min)
		1-30	40	50	60-100	1-60	60-100	1-100	
HX84001S	-1.2	-18	-14.4	-13	-12	-40	-35	-40	1500

Schematic

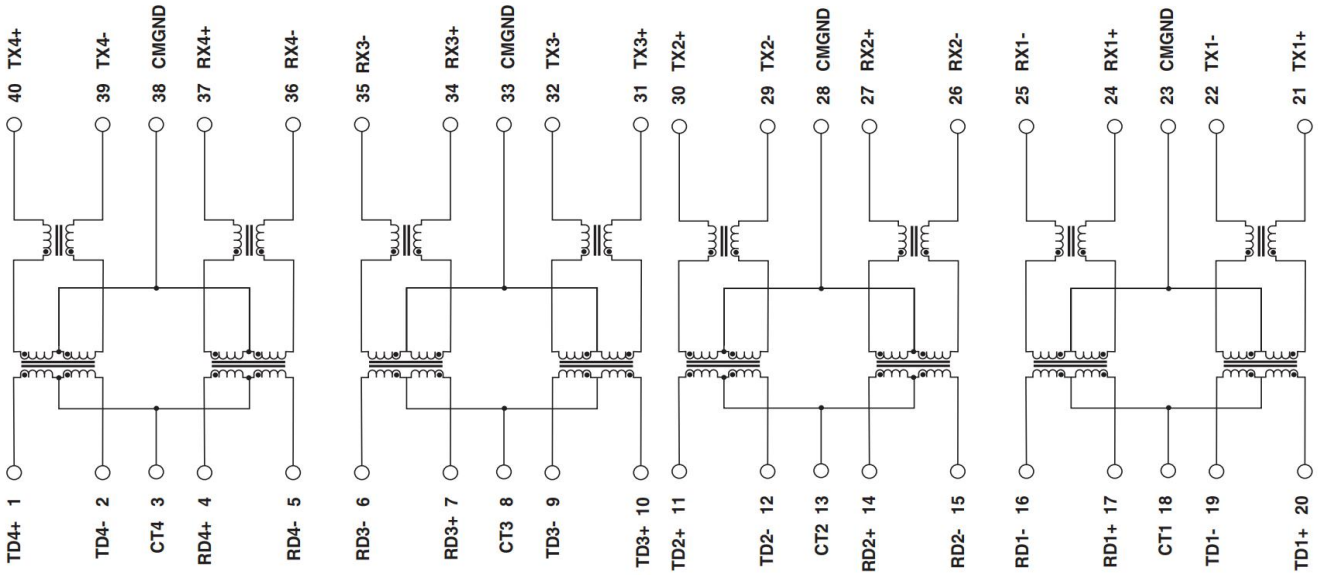

Mechanical:

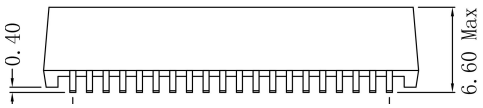

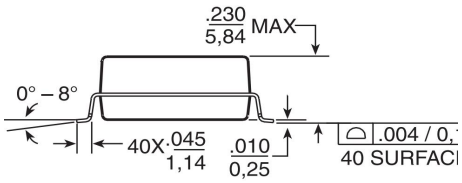

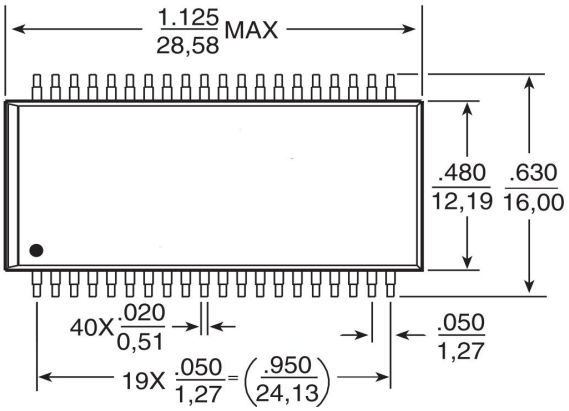

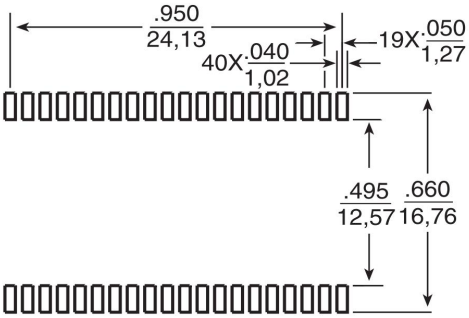

SUGGESTED PAD LAYOUT