PRODUCT DATA SHEET

To learn more about JGSEMI, please visit our website at

Datasheet Resources Samples

Please note: Please check the JINGAO Semiconductor website to verify the updated device numbers. The most current and up-to-date ordering information can be found at www.jg-semi.cn. Please email any questions regarding the system integration to Fairchild_questions@jgsemi.com.

General Description

These N-Channel enhancement mode power field effect transistors are using trench DMOS technology. This advanced technology has been especially tailored to minimize on-state resistance, provide superior switching performance, and withstand high energy pulse in the avalanche and commutation mode. These devices are well suited for high efficiency fast switching applications.

BVDSS	RDSON	ID
100V	90mΩ	7A

Features

- *100V,7A, RDS(ON) =90mΩ@VGS = 10V*
- *Improved dv/dt capability*
- *Fast switching*
- *Green Device Available*

Dual SOP8 Pin Configuration

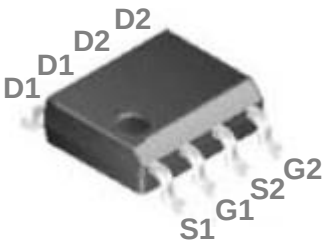

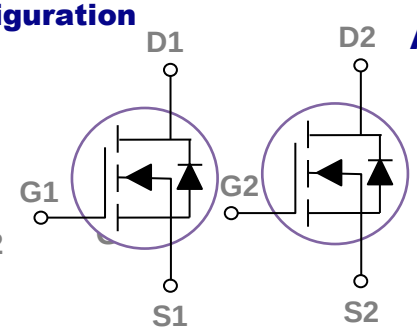

Applications

- *Networking*
- *Load Switch*
- *LED applications*

Absolute Maximum Ratings Tc=25℃ unless otherwise noted

Symbol	Parameter	Rating	Units
V_{DS}	Drain-Source Voltage	100	V
V_{GS}	Gate-Source Voltage	±20	V
I_D	Drain Current – Continuous (T_C=25℃)	7.0	A
	Drain Current – Continuous (T_C=100℃)	4.1	A
I_{DM}	Drain Current – Pulsed[1]	26	A
P_D	Power Dissipation (T_C=25℃)	9	W
	Power Dissipation – Derate above 25℃	0.072	W/℃
T_{STG}	Storage Temperature Range	-50 to 150	℃
T_J	Operating Junction Temperature Range	-50 to 150	℃

Thermal Characteristics

Symbol	Parameter	Typ.	Max.	Unit
$R_{\theta JA}$	Thermal Resistance Junction to ambient	---	62	℃/W
$R_{\theta JC}$	Thermal Resistance Junction to Case	---	14	℃/W

Electrical Characteristics (T_J=25 ℃, unless otherwise noted)

Off Characteristics

Symbol	Parameter	Conditions	Min.	Typ.	Max.	Unit
BV_{DSS}	Drain-Source Breakdown Voltage	V_{GS}=0V , I_D=250uA	100	---	---	V
$\triangle BV_{DSS}/\triangle T_J$	BV_{DSS} Temperature Coefficient	Reference to 25℃ , I_D=1mA	---	0.05	---	V/℃
I_{DSS}	Drain-Source Leakage Current	V_{DS}=100V , V_{GS}=0V , T_J=25℃	---	---	1	uA
		V_{DS}=80V , V_{GS}=0V , T_J=125℃	---	---	10	uA
I_{GSS}	Gate-Source Leakage Current	$V_{GS=}$±20V , V_{DS}=0V	---	---	±100	nA

On Characteristics

$R_{DS(ON)}$	Static Drain-Source On-Resistance	V_{GS}=10V , I_D=5A	---	90	115	mΩ
		V_{GS}=4.5V , I_D=3A	---	95	145	mΩ
$V_{GS(th)}$	Gate Threshold Voltage	V_{GS}=V_{DS} , I_D =250uA	1.0	1.5	2.5	V
$\triangle V_{GS(th)}$	$V_{GS(th)}$ Temperature Coefficient		---	-5	---	mV/℃
gfs	Forward Transconductance	V_{DS}=10V , I_D=3A	---	8.7	---	S

Dynamic and switching Characteristics

Q_g	Total Gate Charge[2,3]	V_{DS}=48V , V_{GS}=10V , I_D=5A	---	22	---	nC
Q_{gs}	Gate-Source Charge[2,3]		---	3.9	---	
Q_{gd}	Gate-Drain Charge[2,3]		---	5.2	---	
$T_{d(on)}$	Turn-On Delay Time[2,3]	V_{DD}=30V , V_{GS}=10V , R_G=3.3Ω I_D=1A	---	2.9	---	ns
T_r	Rise Time[2,3]		---	9.5	---	
$T_{d(off)}$	Turn-Off Delay Time[2,3]		---	18.4	---	
T_f	Fall Time[2,3]		---	5.3	---	
C_{iss}	Input Capacitance	V_{DS}=50V , V_{GS}=0V , F=1MHz	---	1480	---	pF
C_{oss}	Output Capacitance		---	480	---	
C_{rss}	Reverse Transfer Capacitance		---	35	---	
R_g	Gate resistance	V_{GS}=0V, V_{DS}=0V, F=1MHz	---	1.5	---	Ω

Drain-Source Diode Characteristics and Maximum Ratings

Symbol	Parameter	Conditions	Min.	Typ.	Max.	Unit
I_S	Continuous Source Current	V_G=V_D=0V , Force Current	---	---	7.0	A
I_{SM}	Pulsed Source Current		---	---	14	A
V_{SD}	Diode Forward Voltage	V_{GS}=0V , I_S=1A , T_J=25℃	---	---	1.2	V

Note :
1. Repetitive Rating : Pulsed width limited by maximum junction temperature.
2. The data tested by pulsed , pulse width ≦ 300us , duty cycle ≦ 2%.
3. Essentially independent of operating temperature.

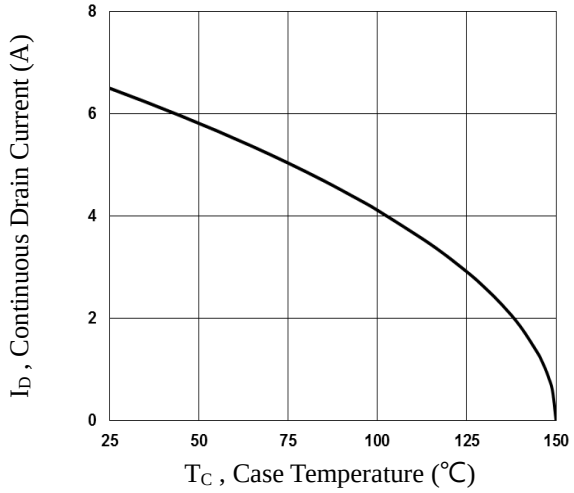

Fig.1 Continuous Drain Current vs. T_C

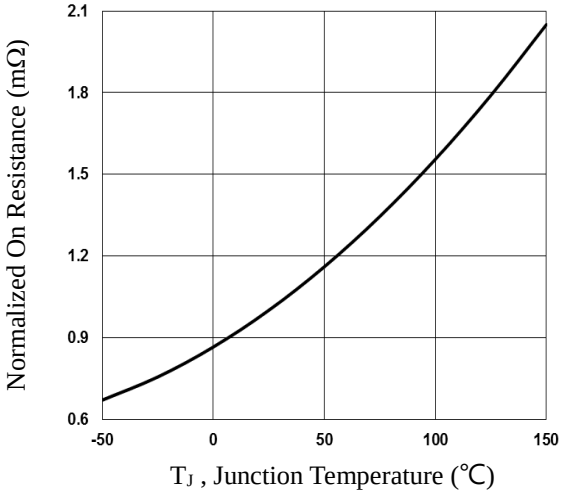

Fig.2 Normalized RDSON vs. T_J

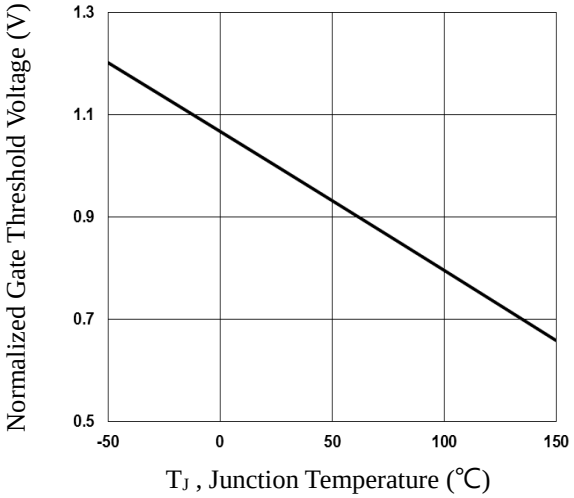

Fig.3 Normalized V_{th} vs. T_J

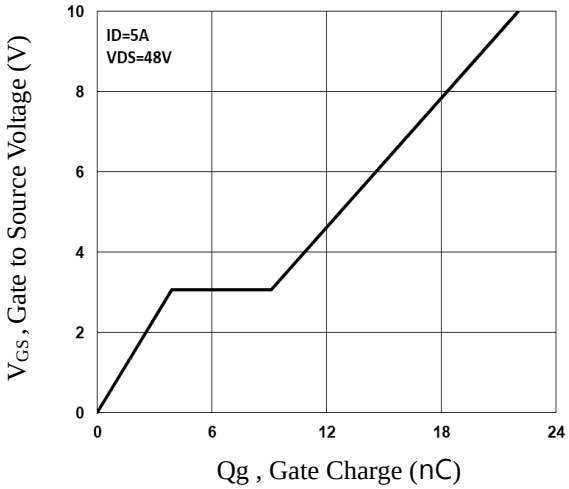

Fig.4 Gate Charge Waveform

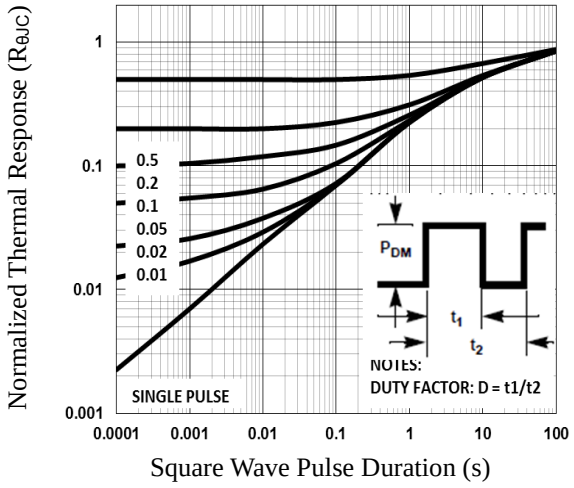

Fig.5 Normalized Transient Impedance

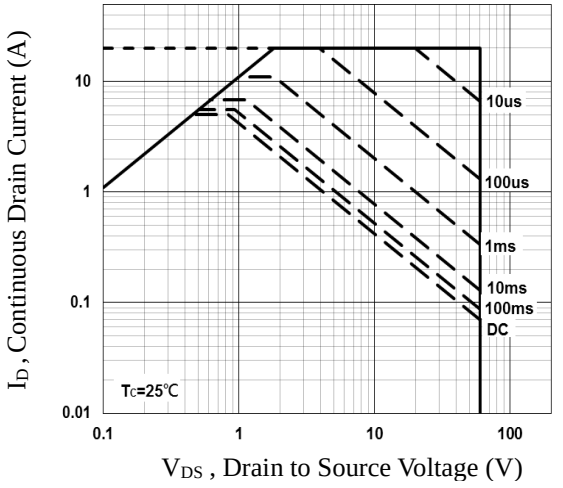

Fig.6 Maximum Safe Operation Area

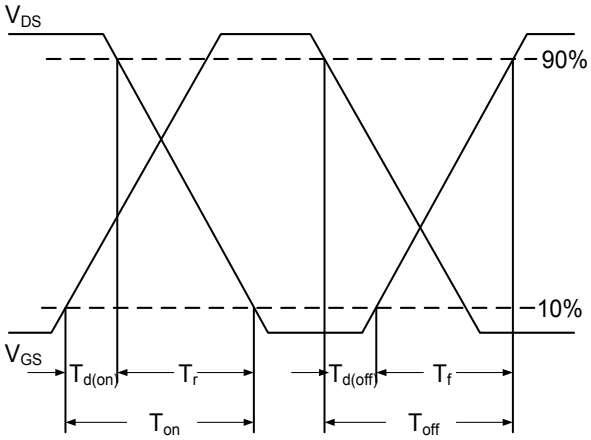

Fig.7 Switching Time Waveform

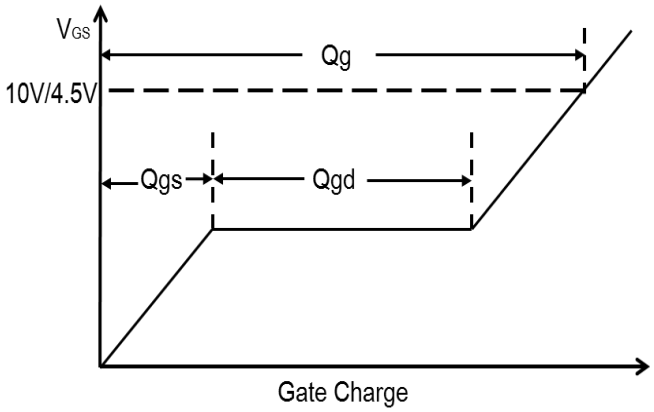

Fig.8 Gate Charge Waveform

SOP8 PACKAGE INFORMATION

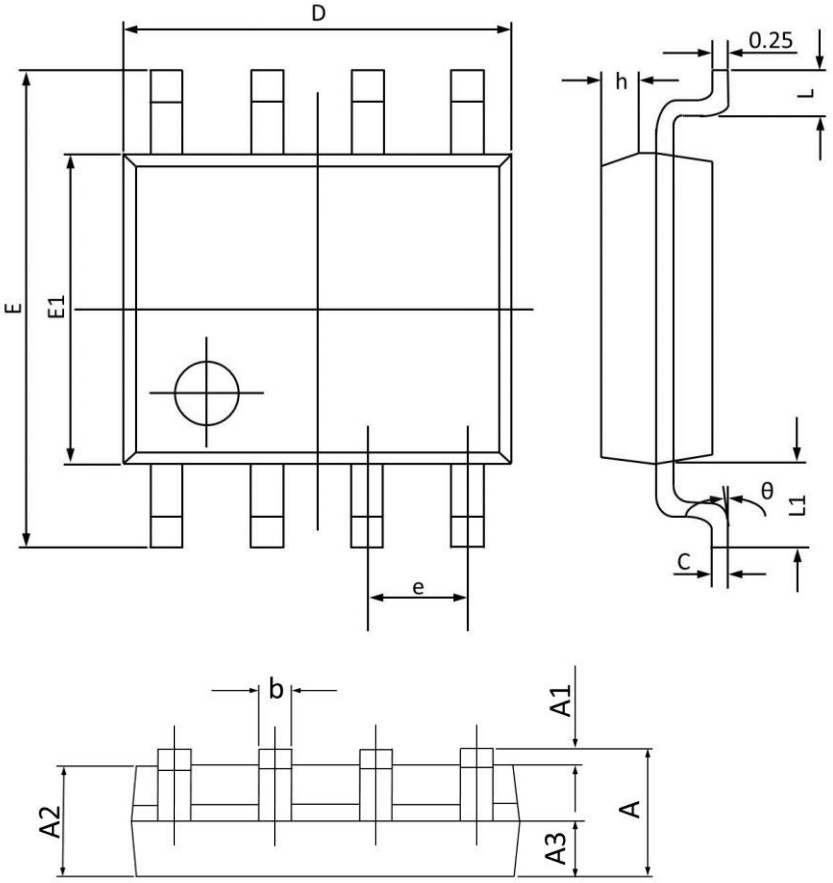

Symbol	Dimensions In Millimeters		Dimensions In Inches	
	Min	Max	Min	Max
A	1.350	1.750	0.053	0.069
A1	0.100	0.250	0.004	0.010
A2	1.250	1.650	0.049	0.065
A3	0.500	0.700	0.020	0.028
b	0.380	0.510	0.015	0.020
c	0.170	0.260	0.007	0.010
D	4.700	5.100	0.185	0.201
E	5.800	6.200	0.228	0.244
E1	3.700	4.100	0.146	0.161
e	1.270(BSC)		0.050(BSC)	
h	0.250	0.500	0.010	0.020
L	0.400	0.800	0.016	0.031
L1	1.050(BSC)		0.041(BSC)	
θ	0°	8°	0°	8°

Attention

1, Any and all JGSEMI products described or contained herein do not have specifications that can handle applications that require extremely high levels of reliability, such as life-support systems, aircraft's control systems, orother applications whose failure can be reasonably expected to result in serious physical or material damage. Consult with your JGSEMI representative nearest you before using any JGSEMI products described or contained herein in such applications.

2,JGSEMI assumes no responsibility for equipment failures that result from using products at values that exceed, even momentarily, rated values (such as maximum ratings, operating condition ranges, or other parameters) listed in products specifications of any and all JGSEMI products described or contained herein.

3, Specifications of any and all JGSEMI products described or contained herein stipulate the performance, characteristics, and functions of the described products in the independent state, and are not guarantees of the performance, characteristics, and functions of the described products as mounted in the customer’s products or equipment. To verify symptoms and states that cannot be evaluated in an independent device, the customer should always evaluate and test devices mounted in the customer’s products or equipment.

4,In the event that any or all JGSEMI products(including technical data, services) described or contained herein are controlled under any of applicable local export control laws and regulations, such products must not be exported without obtaining the export license from the authorities concerned in accordance with the above law.

5, No part of this publication may be reproduced or transmitted in any form or by any means, electronic or mechanical, including photocopying and recording, or any information storage or retrieval system, or otherwise, without the prior written permission of JGSEMI Semiconductor CO., LTD.

6, Any and all information described or contained herein are subject to change without notice due to product technology improvement,etc. When designing equipment, refer to the "Delivery Specification" for the JGSEMI product that you Intend to use.