HSF Pb RoHS

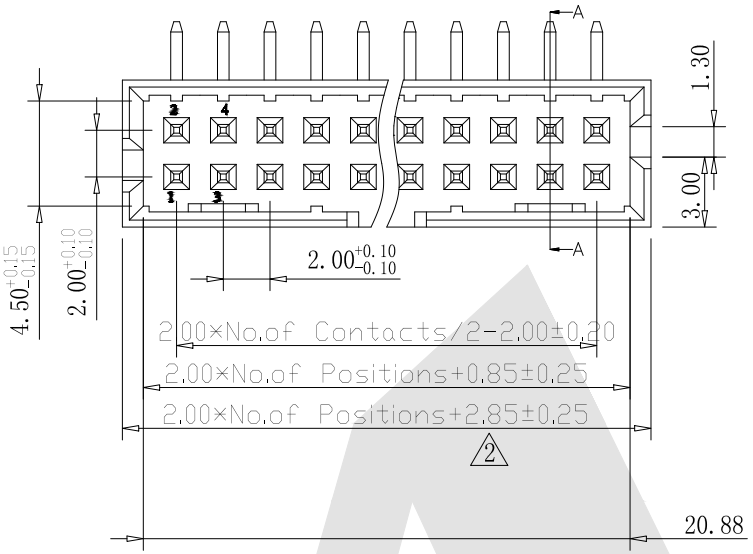

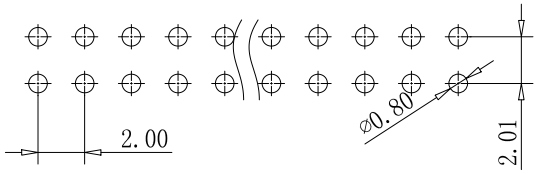

Recommended P.C.B Layout(Top Side)
(PCB BOARD TOLERANCE±0.05)

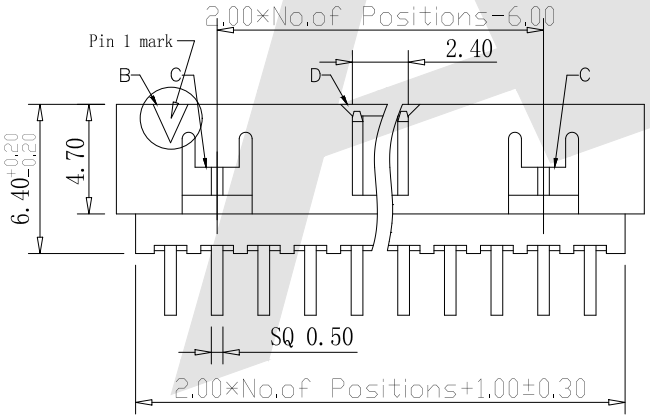

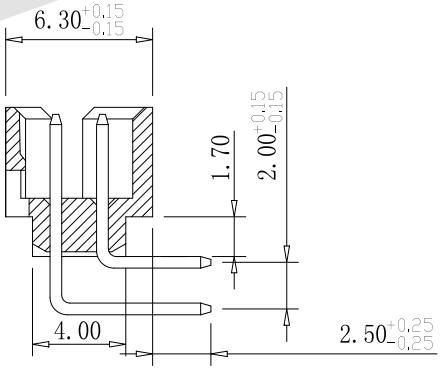

SECTION A-A

SPECIFICATION

Current Rating:	2.0Amp
Insulation Resistance:	1000MΩ min
Contact Resistance:	20MΩ max
Withstand Voltage:	500V AC/DC
Operating Temperature:	-40°C to +105°C
Contact Material:	Brass
Contact Plating:	Au or Sn Over Ni
Insulator Material:	PA6T+30%GF UL 94V-0

4 And 6 Pin Without Identirication Tag
"B", Slot "C" And Slot "D"
8 To 12 Pin Without Slot "C'

Ordering Code:

BHCR02 - X - X - X - X - X
① ② ③ ④ ⑤ ⑥

① Series No:

② No. of Contacts
04 06 08 10 12 14
1 16 18 20 22 24 26
28 30 32 34 36 38
40 42 44 46 48 50

③ Contact Plating:
G0:Gold flash S0:Selective
G1:3U" Gold S1:Selective 3u"
G2:5u" Gold S2:Selective 5u"
G3:10u "Gold S3:Selective 10u"
G4:15u" Gold S4:Selective 15u"
G5:30u" Gold S5:Selective 30u"
SN:Tin

④ Color Insulator
B:Black
U:Blue
W:White

⑤ nsulator Material
B:PA6T
C:LCP
E:PA9T

⑥ Packing
A:Tray
B:Bag
T:Tube
U:Tube+CAP
R:Tape&Reel
W:Tape&Reel+CAP

Unless Otherwise specified tolerance
X. ±0.35 X.XX: ±0.20
X.X: ±0.25 X.XXX: ±0.15

SCALE: As Shown	UNIT: mm
DRAW YG ZHONG	DATE 01/05/2016
CHECK BobYang	DATE 01/05/2016

3rd ANGLE PROJECTION

ANTENK ELECTRONICS CO,.LTD
Http://www.antenk.com
E-mail:sales@antenk.com

TITLE: 2.00mm Box Header 90° H=6.40

DRAWING NO: BHCR02-XXXXX

PRODUCT NO: BHCR02-XXXXX

REV	DESCRIPTION	DATE
2	Revise dimension	09/19/2022
1	Update No. of Contacts	08/10/2021

Antenk