AO4459

-30V P Channel Enhancement MOSFET

Description

The AO4459 is the new generation trench P-ch MOSFET has been designed to minimize the on-state resistance (RDS(ON)) yet maintain superior switching performance, making it ideal for high efficiency power management applications

V_{DSS}	-30V
I_D	-10A
$R_{DS(ON)}$	12.5mΩ@ V_{GS}=-10V
$R_{DS(ON)}$	19.5mΩ @ V_{GS}=-4.5V

Features

- High - speed switching
- Excellent gate charge x Rds(ON) procuct (FOM)
- for extremely low RDS(ON)
- Lead-Free,Halogen-Free; RoHS Compliant

Outline

SOP-8 Pin Configuration

Applications

- POL Applications
- Load Switch
- Power Management

Equivalent

(4)Gate
(1\2\3)Source
(5\6\7\8)Drain

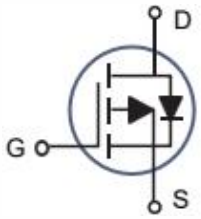

Packaging specifications

Part No.	Package	Marking	Basic ordering unit.(pcs)
AO4459	SOP-8		3000

Absolute Maximum Ratings

Parameter		Symbol	Limit	Units
Drain-Source Voltage		V_{DS}	-30	V
Gate-Source Voltage		V_{GS}	±20	V
Drain Current-Continuous(Note2)	T_C=25°C	I_D	-10	A
	T_C=70°C		-7.9	A
-Pulsed(Note 1、Note 2)		I_{DM}	-40	A
Maximum Power Dissipation	T_C=25°C	P_D	2.8	W
	T_C=70°C		2.2	W
Operating Junction and Storage Temperature Range		T_J, T_{STG}	-55 to 150	°C
Thermal Resistance Junction-Ambient		$R_{\theta JA}$	50	°C /W

Electrical Characteristics (T_C=25 ℃, unless otherwise noted)

Parameter	Symbol	Test Conditions	Min	Typ	Max	Units
OFF CHARACTERISTICS						
Drain-Source Breakdown Voltage	BV_{DSS}	V_{GS}=0V , $I_{D=-}$250uA	-30			V
Zero Gate Voltage Drain Current	I_{DSS}	V_{DS}=-30V , V_{GS}=0V			-1	uA
Gate-Body Leakage Current	I_{GSS}	V_{GS} = ±20V , V_{DS} =0V			±100	nA
ON CHARACTERISTICS						
Gate Threshold Voltage	$V_{GS(th)}$	V_{DS} = V_{GS}, I_D=-250uA	-1	-1.8	-2.5	V
Drain-Source On-State Resistance	$R_{DS(ON)}$	V_{GS} =-10V , I_D =-8A		12.5	16	mΩ
		V_{GS} =-4.5V , I_D =-4A		19.5	26	mΩ
Forward Transconductance	g_{FS}	V_{gs} =-10V , I_D =-8A		10.5		S
DYNAMIC CHARACTERISTICS Note4						
Input Capacitance	C_{ISS}	V_{DS} =-15V , V_{GS} =0 V , f =1.0MHz		1350		pF
Output Capacitance	C_{OSS}			180		pF
Reverse Transfer Capacitance	C_{RSS}			120		pF
Total Gate Charge	Qg	V_{DS} =-15V , I_D =-8A , V_{GS} =-10V		15		nC
Gate-Source Charge	Qgs	V_{DS} =-15V , I_D =-8A , V_{GS} =-10V		4.5		nC
Gate-Drain Charge	Qgd			6		nC
SWITCHING CHARACTERISTICS Note4						
Turn-On Delay Time	$t_{D(ON)}$	V_{DD} =-15V , I_D =-1A , V_{GS} =-10V , R_{GEN} =5Ω		10.5		ns
Rise Time	tr			22		ns
Turn-Off Delay Time	tD(OFF)			60		ns
Fall Time	tf			15.5		ns
DRAIN-SOURCE DIODE CHARACTERISTICS AND MAXIMUM RATINGS						
Diode Forward Voltage	V_{SD}	V_{GS}=0V , I_S=-8A			-1.2	V

Notes：

1、Pulse Test Width < 300us,Duty Cycle< 2%

2、Drain current limited by maximum junction temperature.

3、Starting Tj=25°C ,L=0.1mH,V_{DD}=-15V,VGS=-10V ,RG=25Ω

4、Guaranteed by design,not subject to production testing.

Typical Performance Characteristics

Fig.1 Continuous Drain Current vs. TC

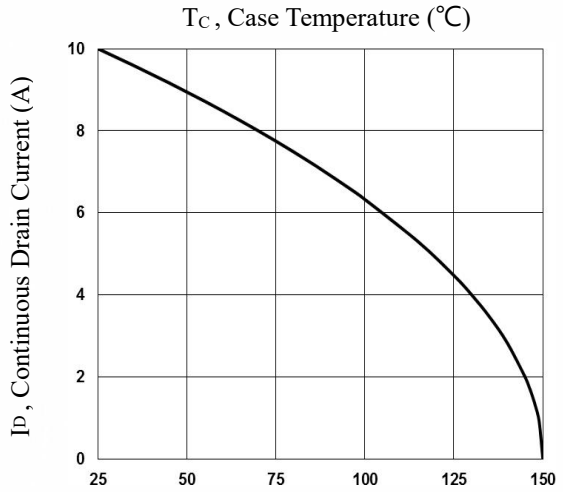

Fig.2 Normalized RDSON vs. TJ

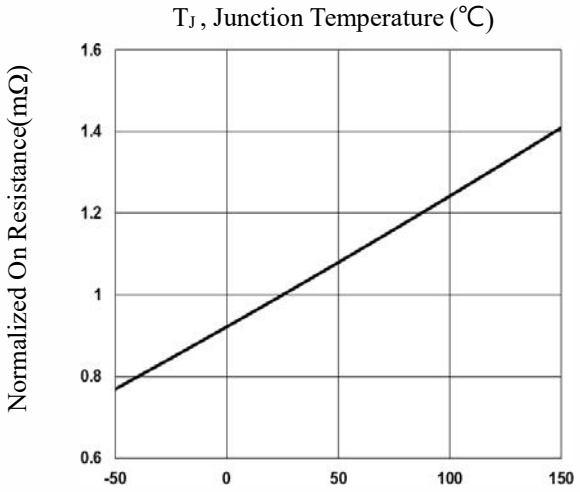

Fig.3 Normalized Vth vs. TJ

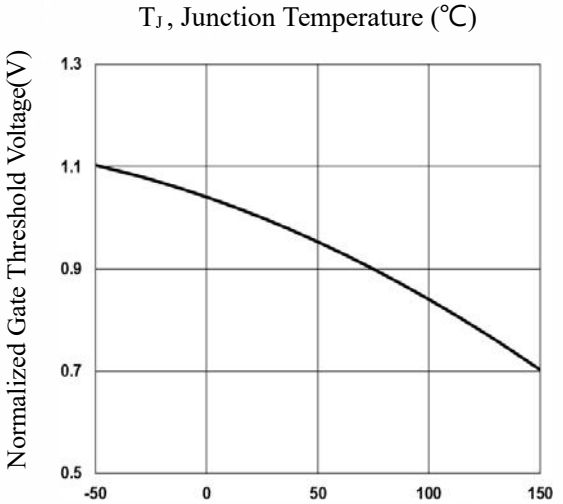

Fig.4 Gate Charge Waveform

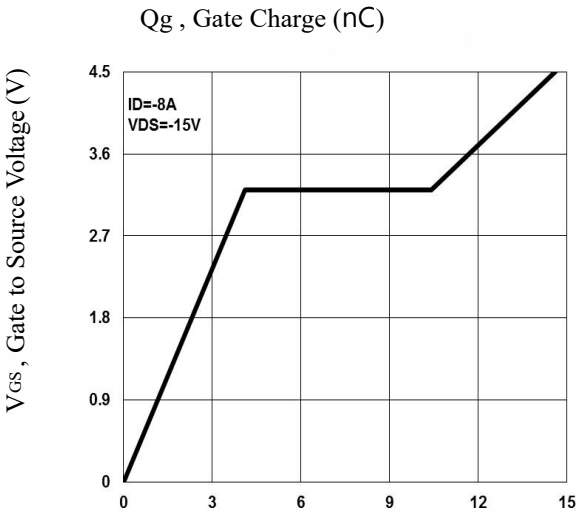

Fig.5 Normalized Transient Impedance

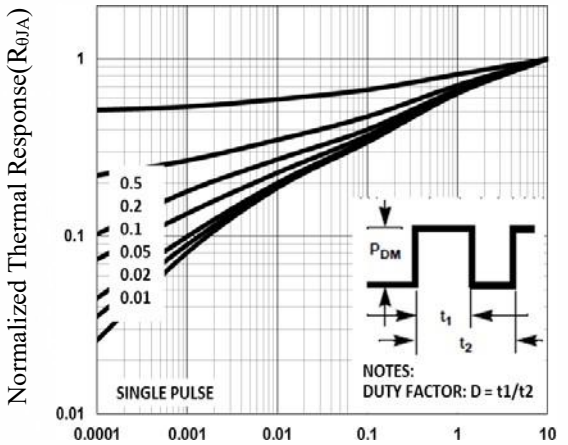

Fig.6 Maximum Safe Operation Area

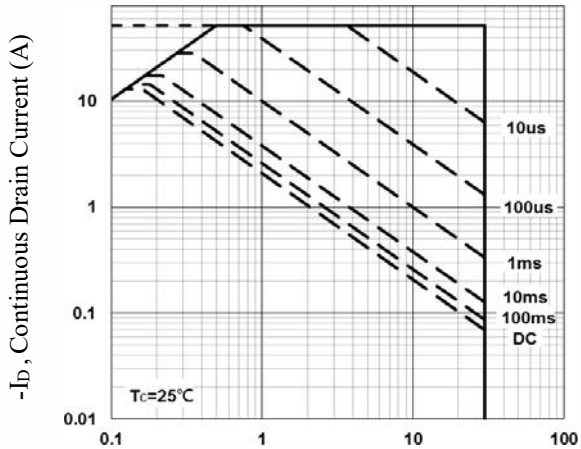

Figure 7a. Switching Test Circuit

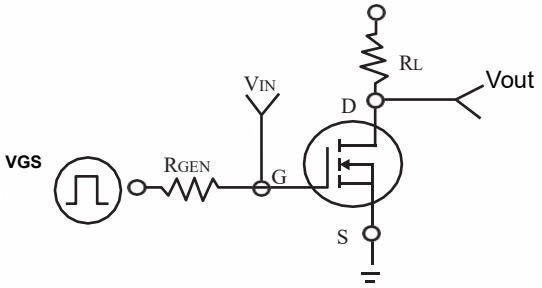

Figure 7b. Switching Waveforms

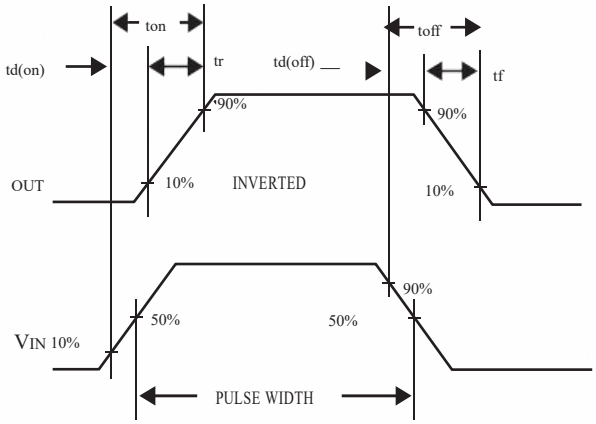

Figure 8a.Unclamped Inductive Test Circuit

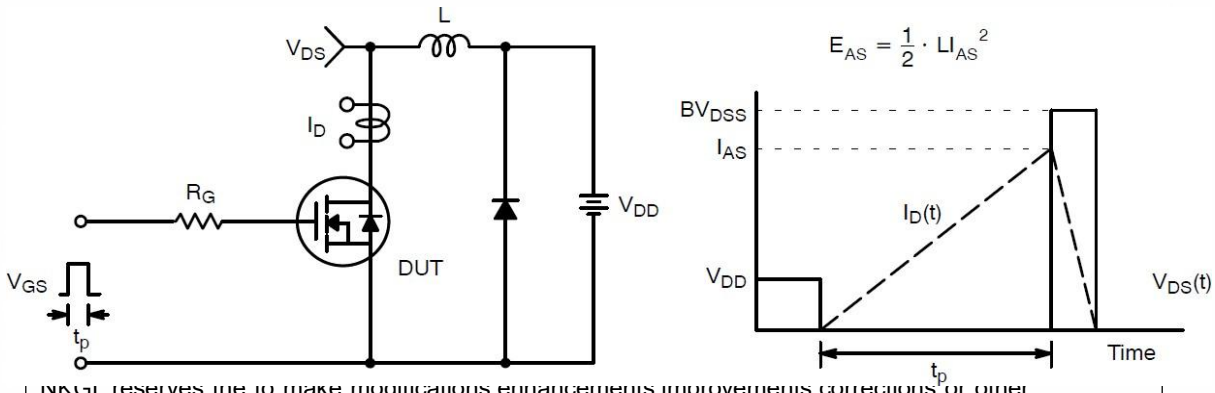

Figure 8b.Unclamped Inductive Waveforms

NKGL reserves the to make modifications,enhancements,improvements,corrections or other changes without further notice to any product herein.NKGL does not assume any liability arsing out of the application or use of any product described herein.

SOP- 8 Package Information

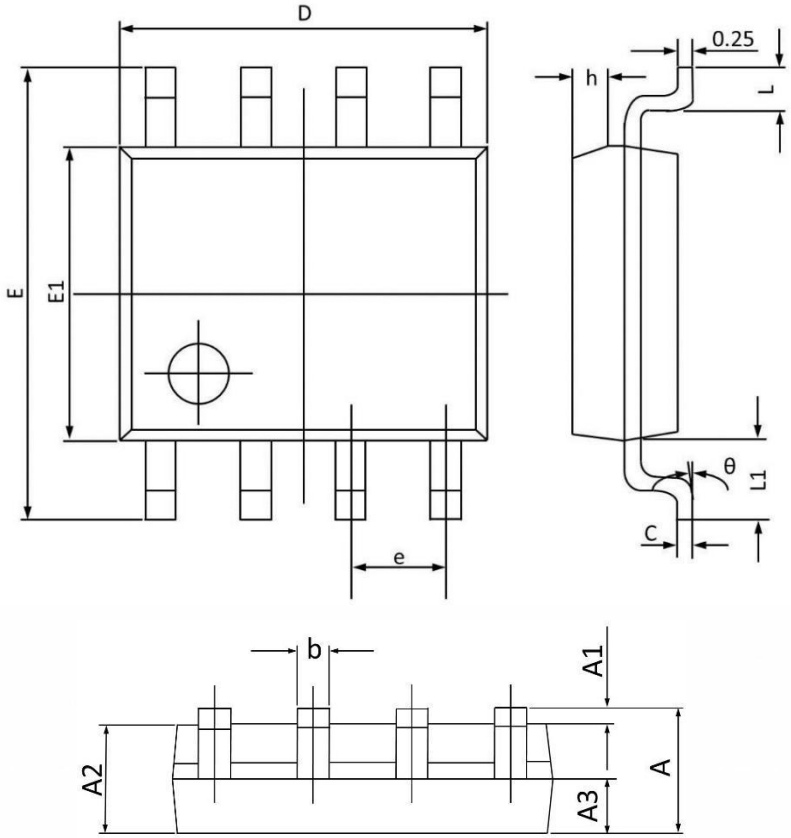

Symbol	Dimensions In Millimeters		Dimensions In Inches	
	Min	Max	Min	Max
A	1.350	1.800	0.053	0.069
A1	0.050	0.250	0.002	0.010
A2	1.250	1.650	0.049	0.065
A3	0.500	0.700	0.020	0.028
b	0.300	0.510	0.012	0.020
c	0.150	0.260	0.006	0.010
D	4.700	5.100	0.185	0.201
E	5.800	6.200	0.228	0.244
E1	3.700	4.100	0.146	0.161
e	1.270(BSC)		0.050(BSC)	
h	0.250	0.500	0.010	0.020
L	0.400	1.000	0.016	0.039
L1	1.050(BSC)		0.041(BSC)	
θ	0°	8°	0°	8°