JST16A-800SW 16A TRIAC

Rev.A.1.3

DESCRIPTION:

The JST16A-800SW triac is suitable for general purpose AC switching. It can be used as an ON/OFF function in applications such as heating regulation, induction motor starting circuits, for phase control operation in light dimmers, motor speed controllers. JST16A-800SW snubberless triac is especially recommended for use on inductive loads. It can be driven directly through the MCU I/O port. By using an internal ceramic pad, JST16A-800SW provides a rated insulation voltage of 2500 VRMS, complying with UL standards (File ref: E252906). Package TO-220A is RoHS compliant.

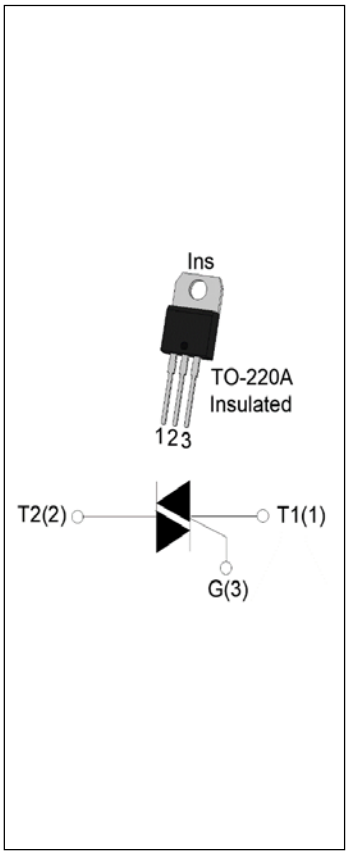

MAIN FEATURES

Symbol	Value	Unit
$I_{T(RMS)}$	16	A
V_{DRM}/V_{RRM}	800	V
$I_{GT\ I/II/III}$	10/10/10	mA

ABSOLUTE MAXIMUM RATINGS

Parameter	Symbol	Value	Unit
Storage junction temperature range	T_{stg}	-40-150	℃
Operating junction temperature range	T_j	-40-125	℃
Repetitive peak off-state voltage (T_j=25℃)	V_{DRM}	800	V
Repetitive peak reverse voltage (T_j=25℃)	V_{RRM}	800	V
RMS on-state current (T_C≤102℃)	$I_{T(RMS)}$	16	A
Non repetitive surge peak on-state current (full cycle , t_p=20ms , T_j=25℃)	I_{TSM}	190	A
Non repetitive surge peak on-state current (full cycle , t_p=16.6ms , T_j=25℃)		209	
I^2t value for fusing (t_p=10ms , T_j=25℃)	I^2t	180	A^2s
Critical rate of rise of on-state current (I_G=2×I_{GT} , f=100Hz , T_j=125℃)	dI/dt	50	A/μs
Peak gate current (t_p=20μs , T_j=125℃)	I_{GM}	4	A

Average gate power dissipation (T_j=125℃)	$P_{G(AV)}$	0.5	W
Peak gate power	P_{GM}	10	W
Peak pulse voltage (T_j=25℃; non-repetitive,off-state;FIG.7)	V_{pp}	4	kV

ELECTRICAL CHARACTERISTICS (T_j=25℃ unless otherwise specified)

Symbol	Test Condition	Quadrant	Value		Unit
I_{GT}	V_D =12V R_L =33Ω	Ⅰ-Ⅱ-Ⅲ	MAX.	10	mA
V_{GT}		Ⅰ-Ⅱ-Ⅲ	MAX.	1	V
V_{GD}	V_D =V_{DRM} T_j =125℃ R_L =3.3kΩ	Ⅰ-Ⅱ-Ⅲ	MIN.	0.2	V
I_L	I_G =1.2I_{GT}	Ⅰ-Ⅲ	MAX.	25	mA
		Ⅱ		30	
I_H	I_T =500mA		MAX.	15	mA
dV/dt	V_D=540V Gate Open T_j =125℃		MIN.	1000	V/μs
(dI/dt)c	(dV/dt)c=10V/μs T_j=125℃		MIN.	5	A/ms
t_{on}	I_G=20mA I_A=200mA I_R=20mA T_j=25℃		TYP.	5	μs
t_{off}				30	

STATIC CHARACTERISTICS

Symbol	Parameter		Value(MAX.)	Unit
V_{TM}	I_{TM} =22.5A t_p=380μs	T_j=25℃	1.5	V
V_{TO}	Threshold voltage	T_j=125℃	0.77	V
R_D	Dynamic resistance	T_j=125℃	30	mΩ
I_{DRM}	V_D =V_{DRM} V_R =V_{RRM}	T_j=25℃	5	μA
I_{RRM}		T_j=125℃	0.5	mA

THERMAL RESISTANCES

Symbol	Parameter	Value	Unit
$R_{th(j-c)}$	junction to case (AC)	1	℃/W
$R_{th(j-a)}$	junction to ambient (AC)	60	℃/W

ORDERING INFORMATION

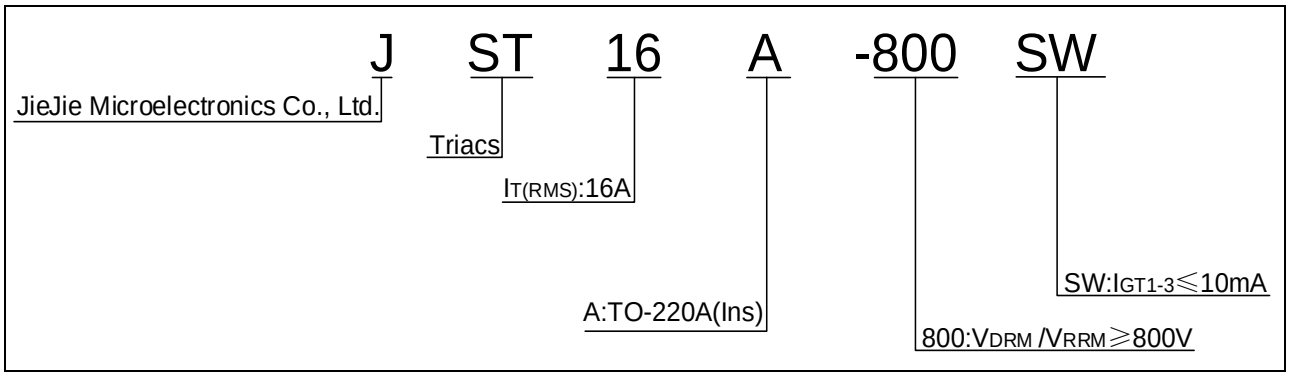

MARKING

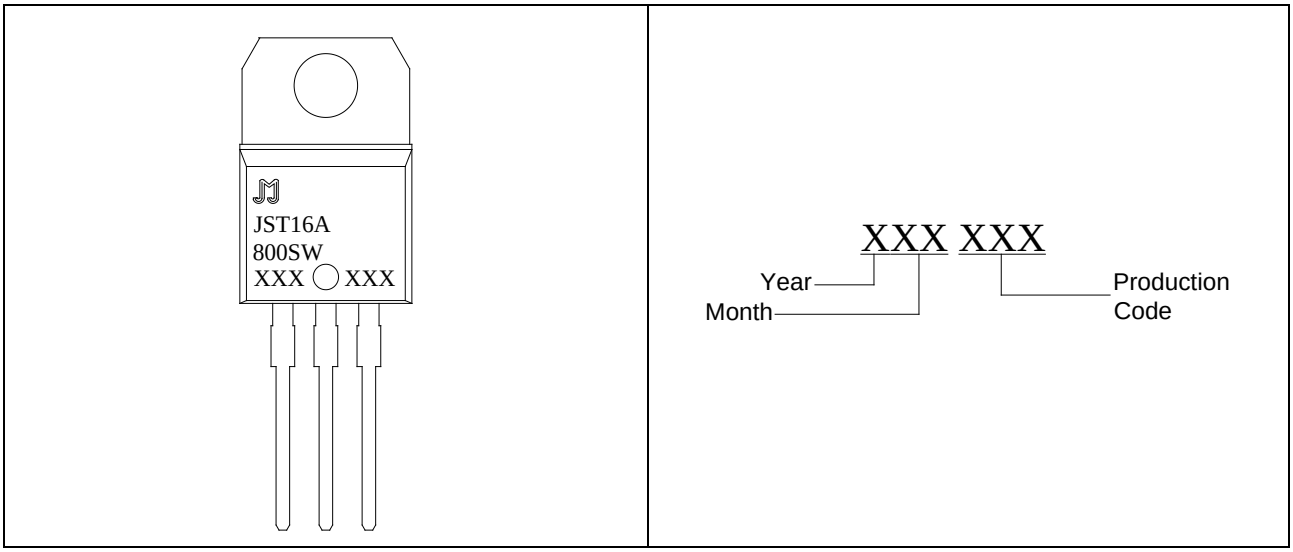

FIG.1: Maximum power dissipation versus RMS on-state current

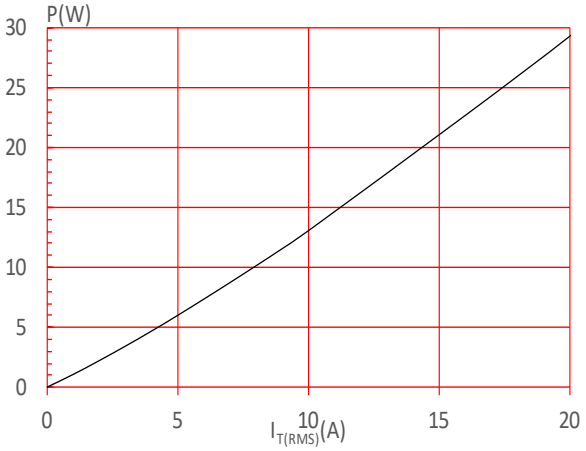

FIG.2: RMS on-state current versus case temperature

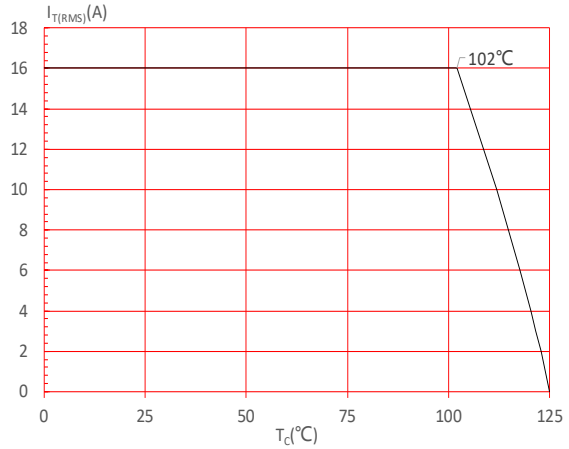

FIG.3: Surge peak on-state current versus number of cycles

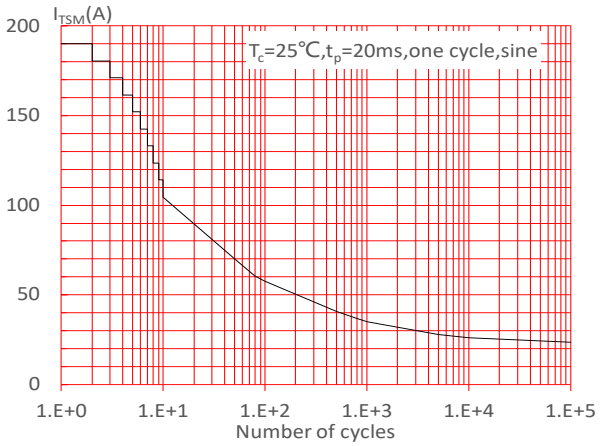

FIG.4: On-state characteristics

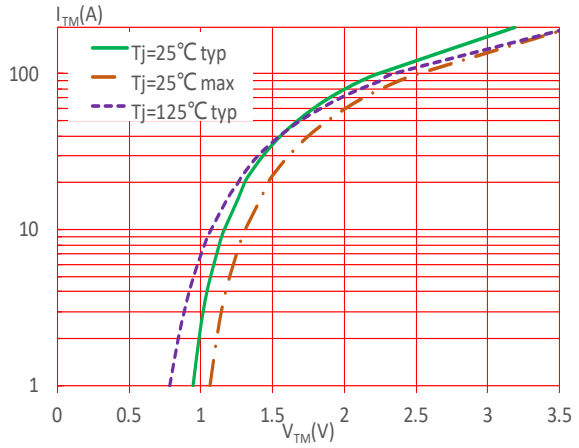

FIG.5: Non-repetitive surge peak on-state current for a sinusoidal pulse with width t_p<20ms, and corresponding value of I^2t (dI/dt<50A/μs)

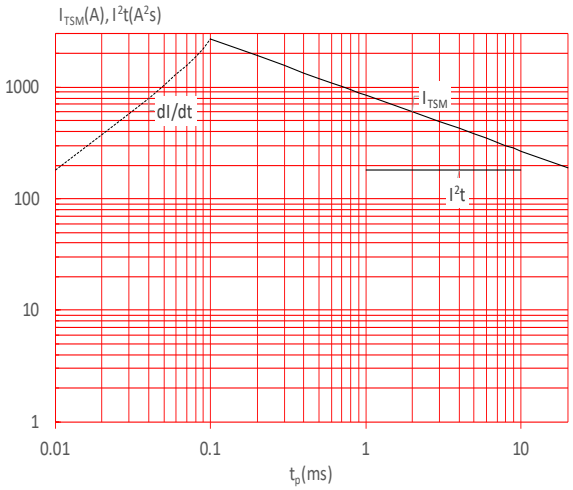

FIG.6: Relative variations of gate trigger current, holding current and latching current versus junction temperature

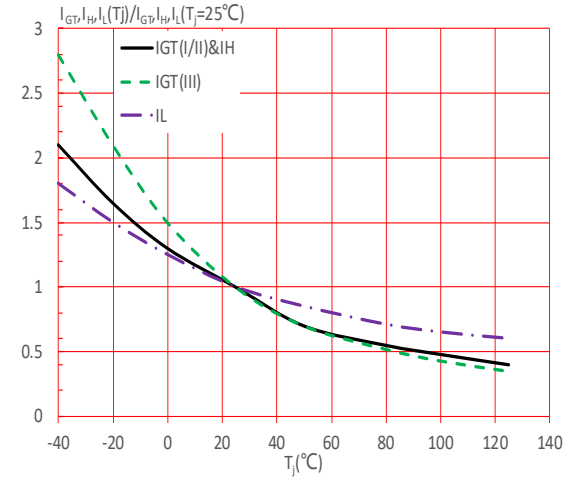

FIG.7：Test circuit for inductive and resistive loads to IEC-61000-4-5 standards

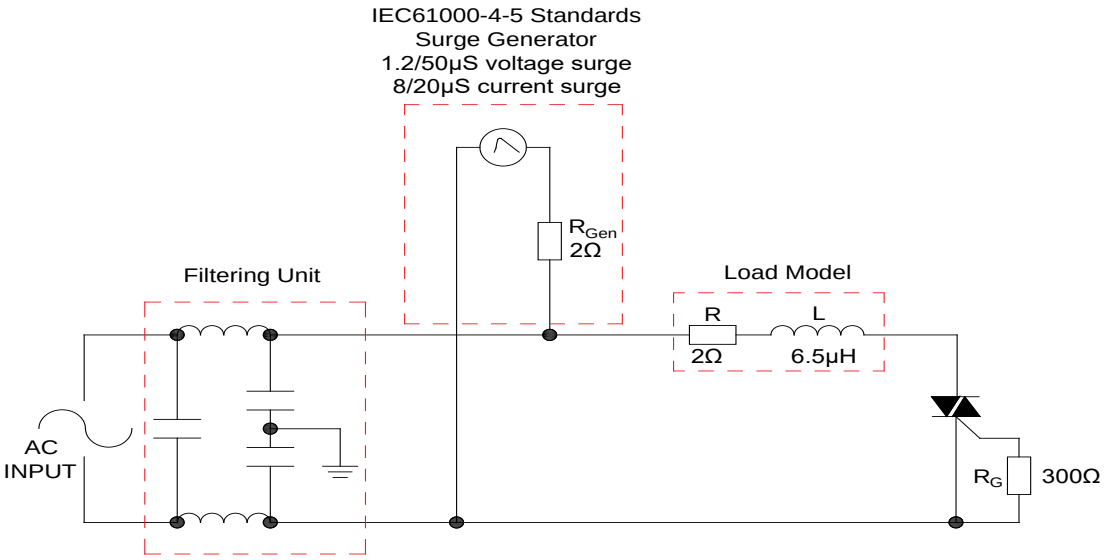

LEAD FORMING AND SOLDERING

Refer to the application note “Assembly Instructions for Thyristors in Through-hole Package” released by JieJie Microelectronics

ORDERING INFORMATION

Order code	Voltage V_{DRM}/V_{RRM} (V)	IGT(mA)	Package	Base qty. (pcs)	Delivery mode
		Ⅰ-Ⅱ-Ⅲ			
JST16A-800SW	800	10	TO-220A(Ins)	50	Tube

Document Revision History

Date	Revision	Changes
Apr.12, 2023	A.1.0	Last update
Oct.13, 2025	A.1.1	Revise PACKAGE MECHANICAL DATA
Jan.23, 2026	A.1.2	Revise $R_{th(j-c)}$
Sept.15, 2026	A.1.3	Revise I_{TSM}, dV/dt

PACKAGE MECHANICAL DATA

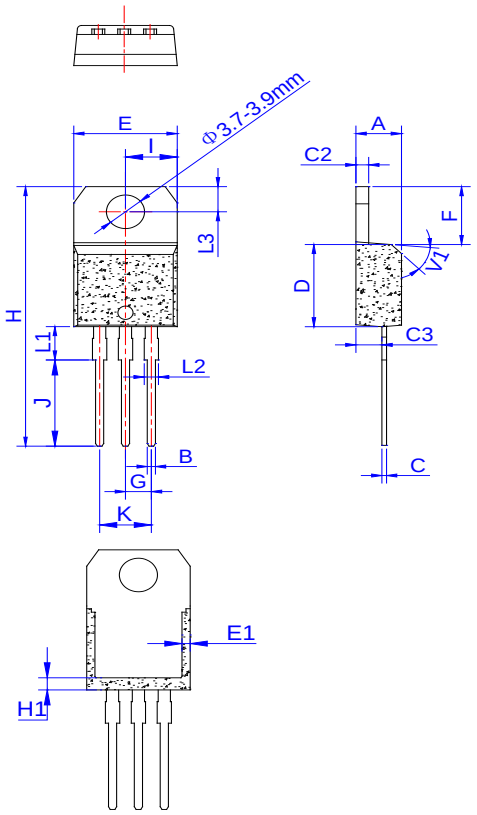

Ref.	Dimensions					
	Millimeters			Inches		
	Min.	Typ.	Max.	Min.	Typ.	Max.
A	4.40		4.60	0.173		0.181
B	0.61		0.88	0.024		0.035
C	0.46		0.70	0.018		0.028
C2	1.21		1.32	0.048		0.052
C3	2.40		2.72	0.094		0.107
D	8.60		9.70	0.339		0.382
E	9.80		10.40	0.386		0.409
E1	1.00		1.40	0.039		0.055
F	6.25		6.85	0.246		0.270
G	2.40		2.70	0.094		0.106
H	28.00		29.80	1.102		1.173
H1	1.80		2.20	0.071		0.087
I	4.80		5.20	0.189		0.205
J	9.55		9.95	0.376		0.392
K	4.80		5.20	0.189		0.205
L1	3.45		4.05	0.136		0.159
L2	1.14		1.70	0.045		0.067
L3	2.65		2.95	0.104		0.116
V1		45°			45°	

DELIVERY MODE

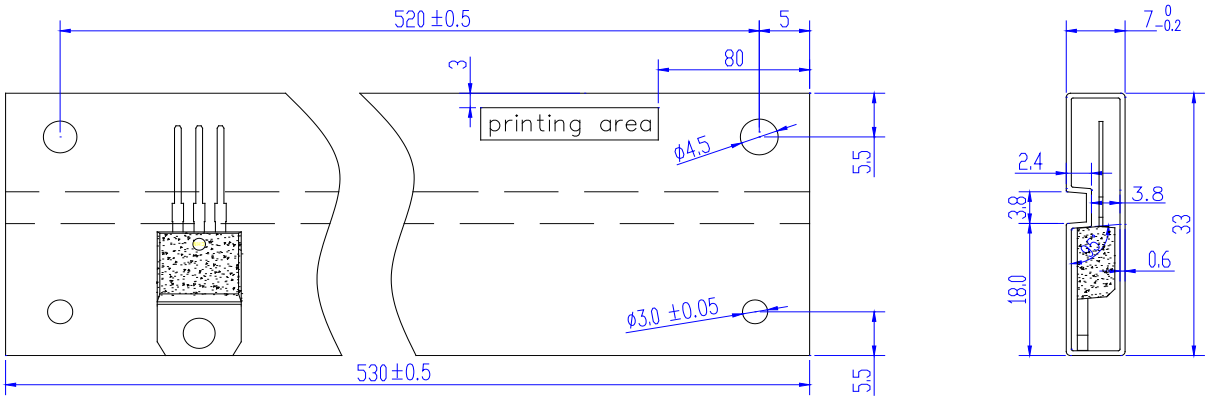

PACKAGE	OUTLINE	TUBE (PCS)	INNER BOX (PCS)	PER CARTON
TO-220A	TUBE	50	1,000	5,000

Information furnished in this document is believed to be accurate and reliable. However, Jiangsu JieJie Microelectronics Co., Ltd. assumes no responsibility for the consequences of use without consideration for such information nor use beyond it. Information mentioned in this document is subject to change without notice, apart from that when an agreement is signed, Jiangsu JieJie complies with the agreement.

Products and information provided in this document have no infringement of patents. Jiangsu JieJie assumes no responsibility for any infringement of other rights of third parties which may result from the use of such products and information. This document supersedes and replaces all information previously supplied.

is a registered trademark of Jiangsu JieJie Microelectronics Co., Ltd.

Copyright © 2026 Jiangsu JieJie Microelectronics Co., Ltd. All rights reserved.