JJMICROELECTRONICS

60V, 80A, 5.4mΩ N-channel Power Trench MOSFET

JMTK80N06A

Features

- Excellent $R_{DS(ON)}$ and Low Gate Charge
- 100% UIS Tested
- 100% ΔVds Tested
- Halogen-free; RoHS-compliant

Applications

- Load Switch
- PWM Application
- Power Management

Product Summary

Parameters	Value	Unit
V_{DSS}	60	V
$V_{GS(th)_Typ}$	3.0	V
I_D(@V_{GS}=10V)	80	A
$R_{DS(ON)_Typ}$(@V_{GS}=10V	5.4	mΩ

RoHS

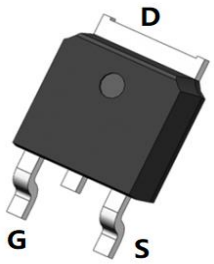

TO-252-3L

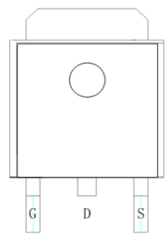

Pin Assignment

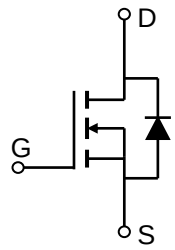

Schematic Diagram

Ordering Information

Device	Marking	MSL	Form	Package	Reel(pcs)	Per Carton (pcs)
JMTK80N06A	JMTK80N06A	3	Tape&Reel	TO-252-3L	2500	25000

Absolute Maximum Ratings (@ T_C = 25°C unless otherwise specified)

Symbol	Parameter		Value	Unit
V_{DS}	Drain-to-Source Voltage		60	V
V_{GS}	Gate-to-Source Voltage		±20	V
I_D	Continuous Drain Current	T_C = 25°C	80	A
		T_C = 100°C	51	
I_{DM}	Pulsed Drain Current (1)		Refer to Fig.4	A
E_{AS}	Single Pulsed Avalanche Energy (2)		168	mJ
P_D	Power Dissipation	T_C = 25°C	40	W
		T_C = 100°C	16	
T_J, T_{STG}	Junction & Storage Temperature Range		-55 to 150	°C

Thermal Characteristics

Symbol	Parameter	Max	Unit
$R_{\theta JA}$	Thermal Resistance, Junction to Ambient(3)	38	°C/W
$R_{\theta JC}$	Thermal Resistance, Junction to Case	3.1	

All product information is copyrighted and subject to legal disclaimers.

Electrical Characteristics (T_J = 25°C unless otherwise specified)

Symbol	Parameter	Conditions	Min.	Typ.	Max.	Unit
Off Characteristics						
$V_{(BR)DSS}$	Drain-Source Breakdown Voltage	I_D = 250μA, V_{GS} = 0V	60	-	-	V
I_{DSS}	Zero Gate Voltage Drain Current	V_{DS} = 60V, V_{GS} = 0V	-	-	1.0	μA
I_{GSS}	Gate-Body Leakage Current	V_{DS} = 0V, V_{GS} = ±20V	-	-	±100	nA
On Characteristics						
$V_{GS(th)}$	Gate Threshold Voltage	V_{DS} = V_{GS}, I_D = 250μA	2.1	3.0	4.0	V
$R_{DS(ON)}$	Static Drain-Source ON-Resistance(4)	V_{GS} = 10V, I_D = 30A	-	5.4	6.6	mΩ
Dynamic Characteristics						
R_g	Gate Resistance	f = 1MHz	-	0.8	-	Ω
C_{iss}	Input Capacitance	V_{GS} = 0V, V_{DS} = 30V, f = 1MHz	2645	3703	4999	pF
C_{oss}	Output Capacitance		190	266	359	pF
C_{rss}	Reverse Transfer Capacitance		165	232	313	pF
Q_g	Total Gate Charge	V_{GS} = 0 to 10V V_{DS} = 30V, I_D = 30A	57	80	108	nC
Q_{gs}	Gate Source Charge		16	22	30	nC
Q_{gd}	Gate Drain("Miller") Charge		20	28	38	nC
Switching Characteristics						
$t_{d(on)}$	Turn-On DelayTime	V_{GS} = 10V, V_{DD} = 30V I_D= 30A, R_{GEN} = 3Ω	-	44	-	ns
t_r	Turn-On Rise Time		-	65	-	ns
$t_{d(off)}$	Turn-Off DelayTime		-	128	-	ns
t_f	Turn-Off Fall Time		-	77	-	ns
Body Diode Characteristics						
I_S	Maximum Continuous Body Diode Forward Current		-	-	80	A
I_{SM}	Maximum Pulsed Body Diode Forward Current		-	-	320	A
V_{SD}	Body Diode Forward Voltage	V_{GS} = 0V, I_S = 30A	-		1.2	V
trr	Body Diode Reverse Recovery Time	I_F = 30A, di/dt = 100A/us	72	101	136	ns
Qrr	Body Diode Reverse Recovery Charge		-	324	-	nC

Notes:

1. Repetitive Rating: Pulse Width Limited by Maximum Junction Temperature.
2. E_{AS} condition: Starting T_J=25C, V_{DD}=30V, V_{GS}=10V, R_G=25ohm, L=0.5mH, I_{AS}=25.9A, V_{DD}=0V during time in avalanche.
3. $R_{\theta JA}$ is measured with the device mounted on a 1inch^2 pad of 2oz copper FR4 PCB.
4. Pulse Test: Pulse Width≤300μs, Duty Cycle≤0.5%.

All product information is copyrighted and subject to legal disclaimers.

Typical Performance Characteristics

Figure 1: Power De-rating

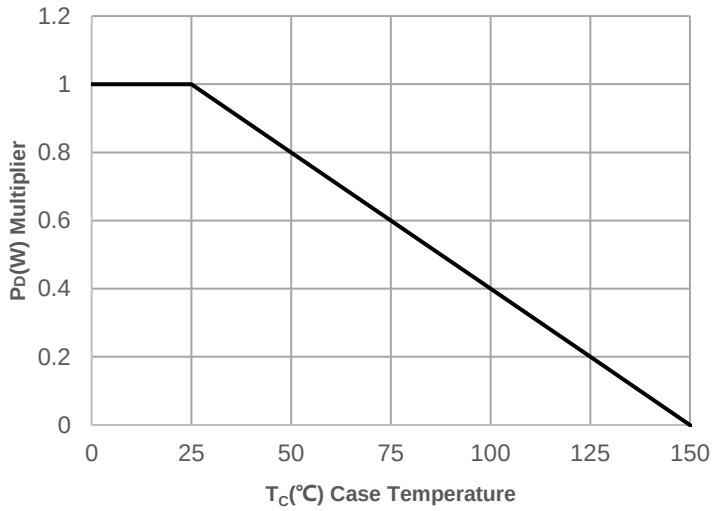

Figure 2: Current De-rating

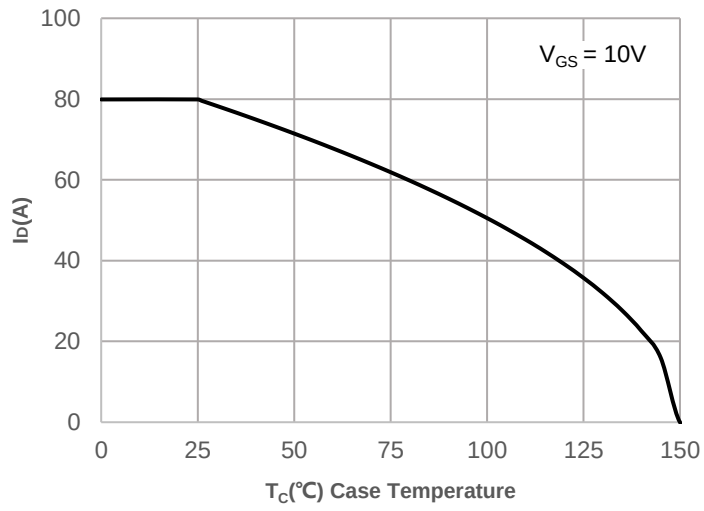

Figure 3: Normalized Maximum Transient Thermal Impedance

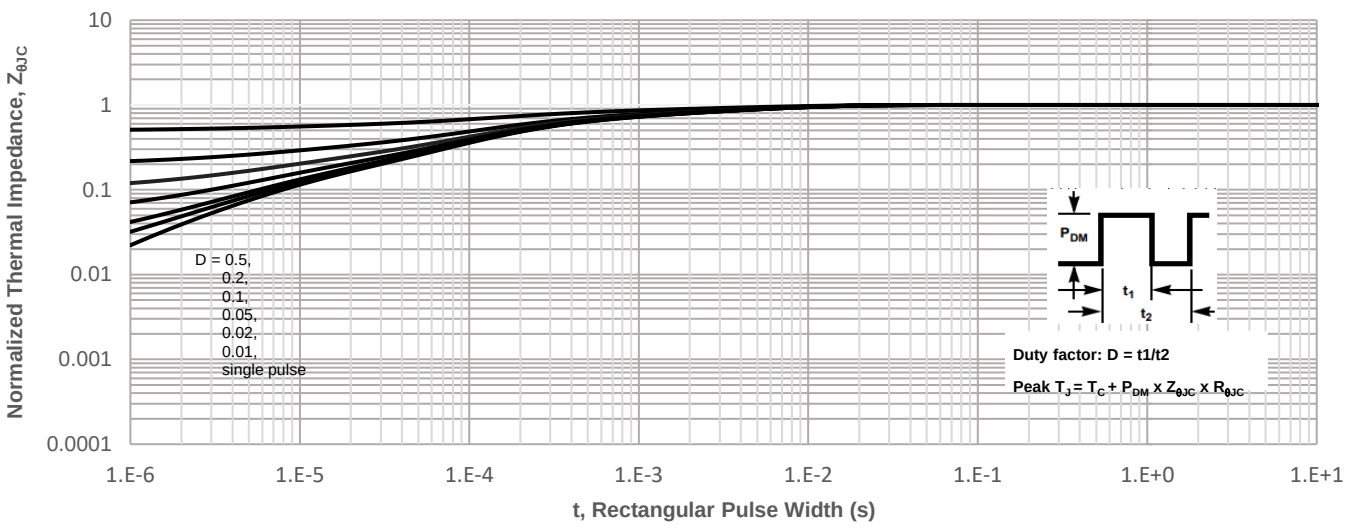

Figure 4: Peak Current Capacity

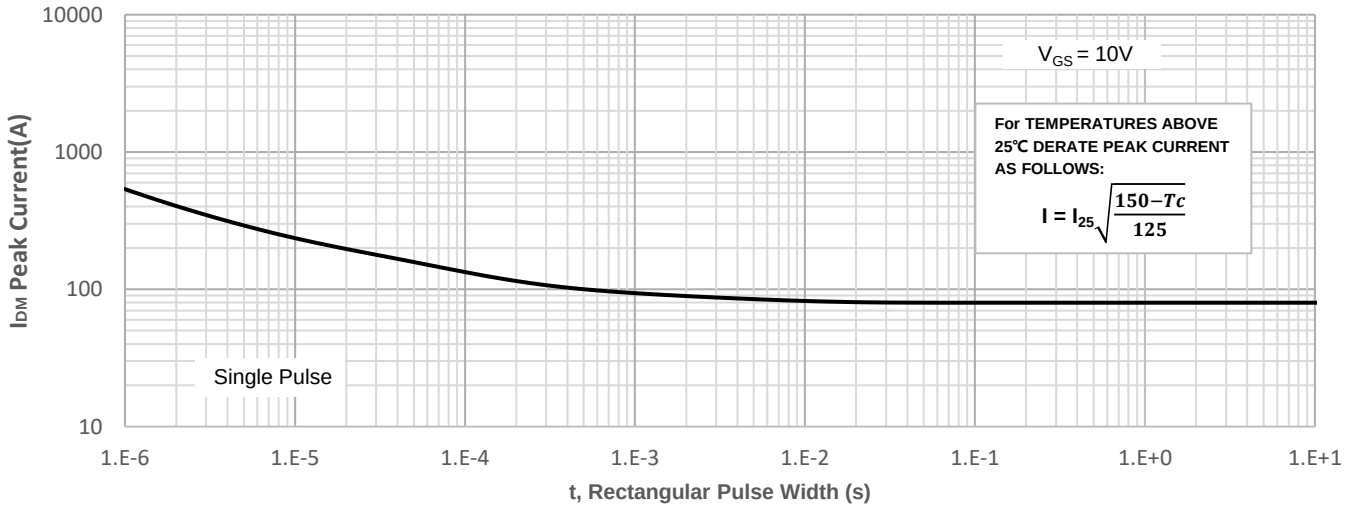

All product information is copyrighted and subject to legal disclaimers.

Typical Performance Characteristics

Figure 5: Output Characteristics

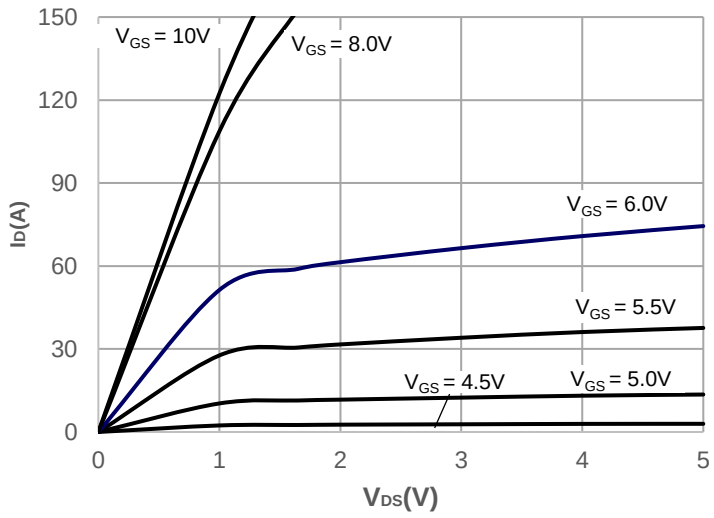

Figure 6: Typical Transfer Characteristics

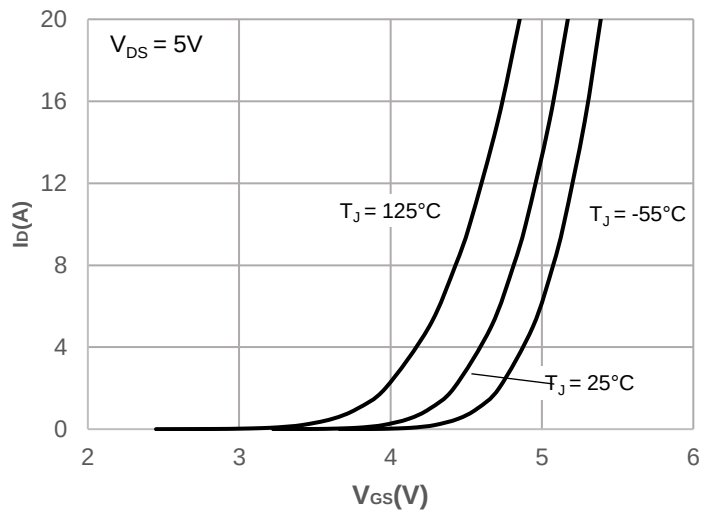

Figure 7: On-resistance vs. Drain Current

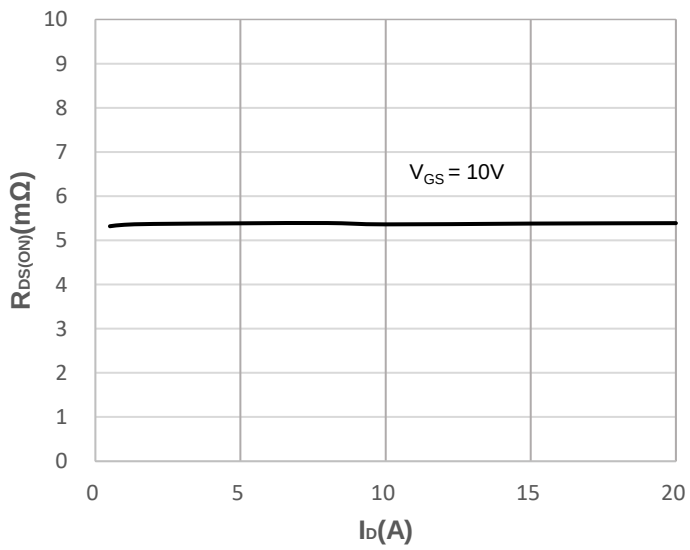

Figure 8: Body Diode Characteristics

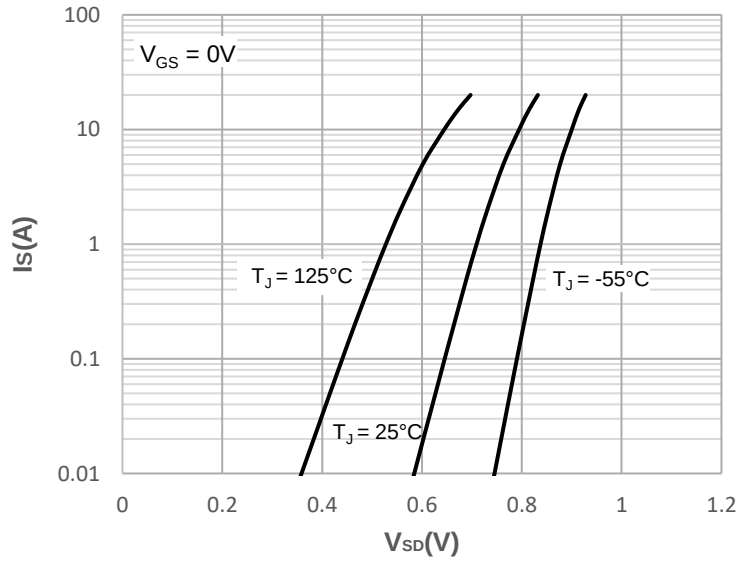

Figure 9: Gate Charge Characteristics

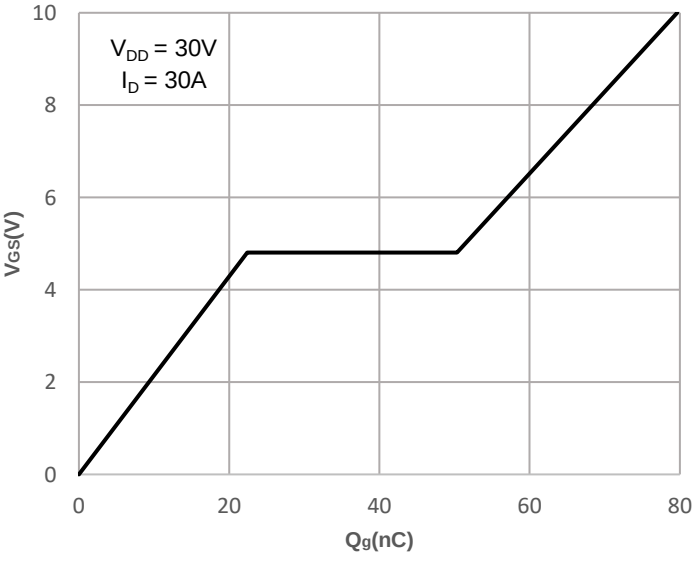

Figure 10: Capacitance Characteristics

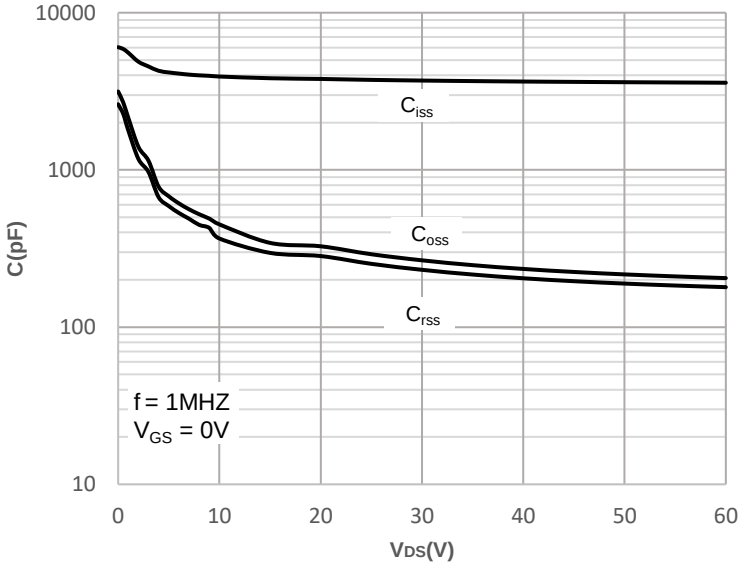

All product information is copyrighted and subject to legal disclaimers.

Typical Performance Characteristics

Figure 11: Normalized Breakdown voltage vs. Junction Temperature

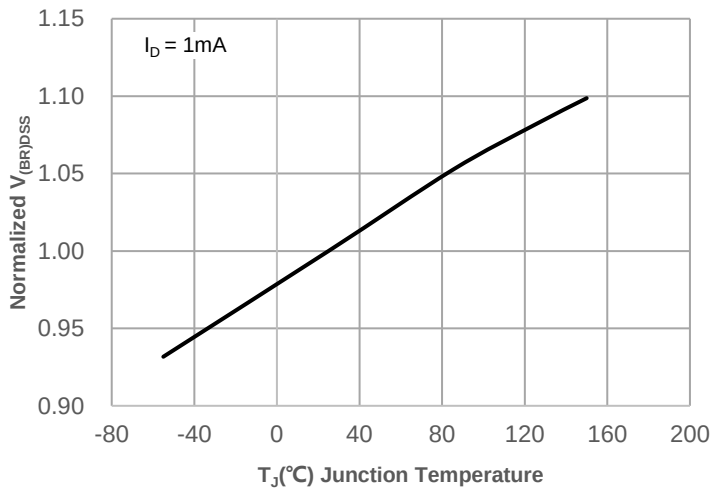

Figure 12: Normalized on Resistance vs. Junction Temperature

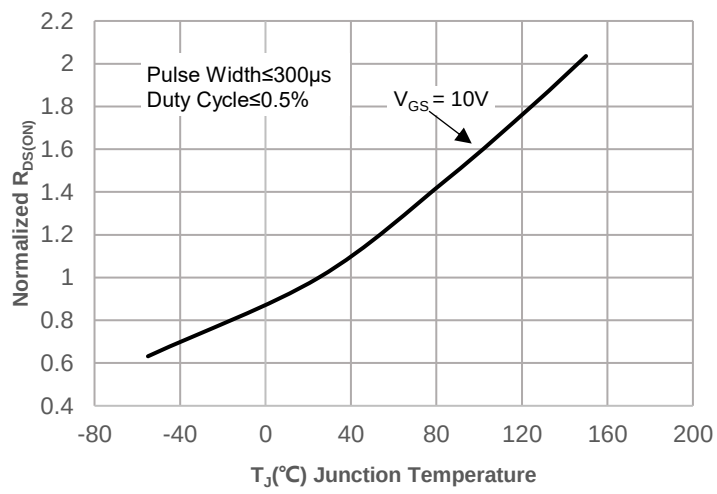

Figure 13: Normalized Threshold Voltage vs. Junction Temperature

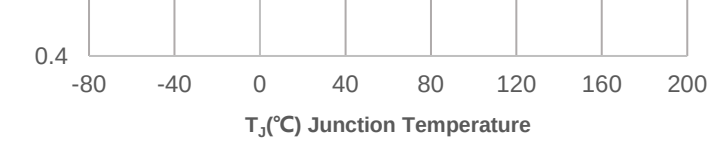

Figure 14: $R_{DS(ON)}$ vs. V_{GS}

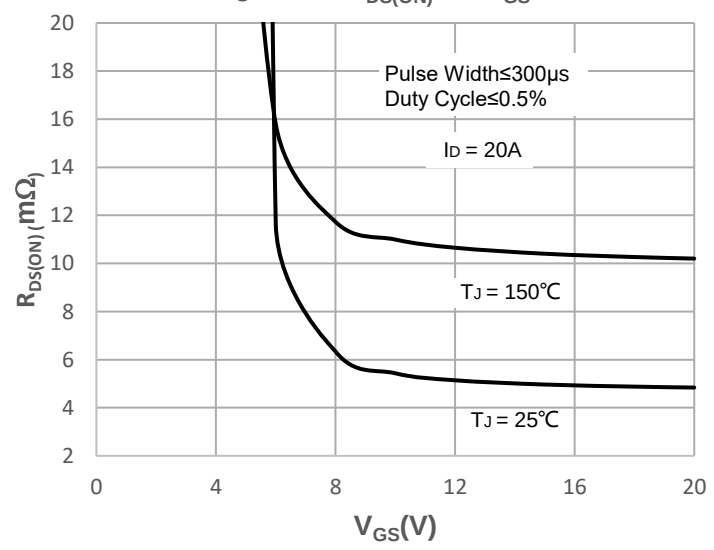

Figure 15: Maximum Safe Operating Area

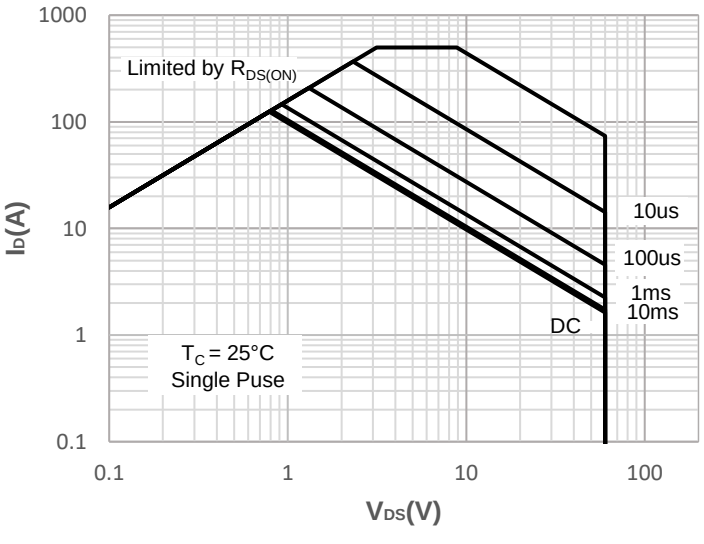

All product information is copyrighted and subject to legal disclaimers.

Test Circuit

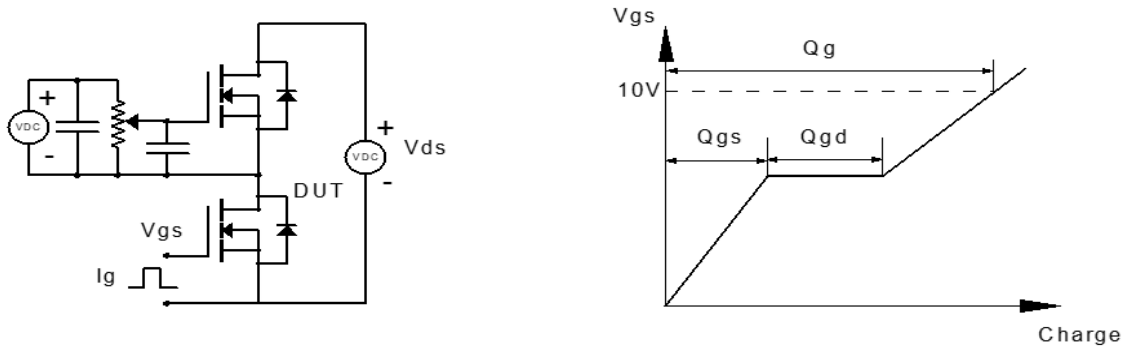

Figure 1: Gate Charge Test Circuit & Waveform

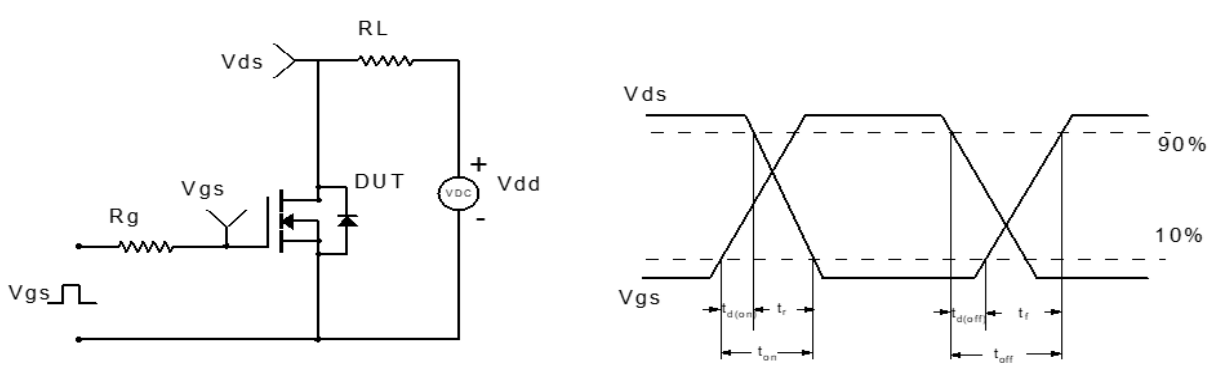

Figure 2: Resistive Switching Test Circuit & Waveform

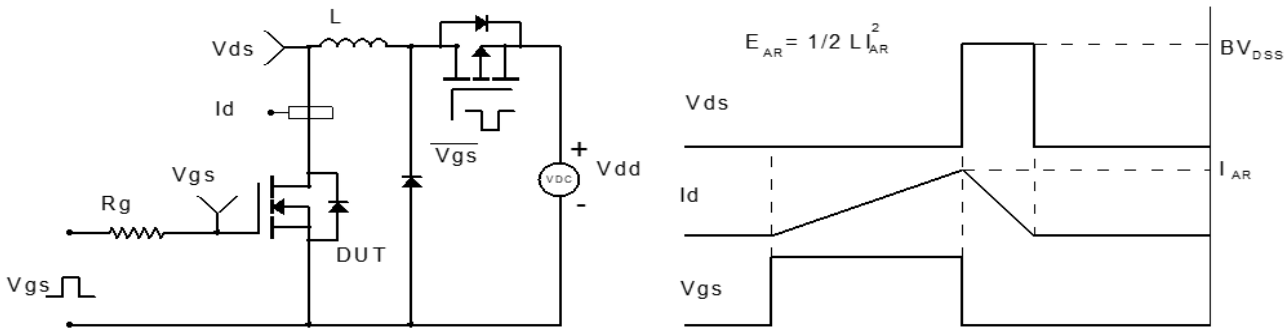

Figure 3: Unclamped Inductive Switching Test Circuit& Waveform

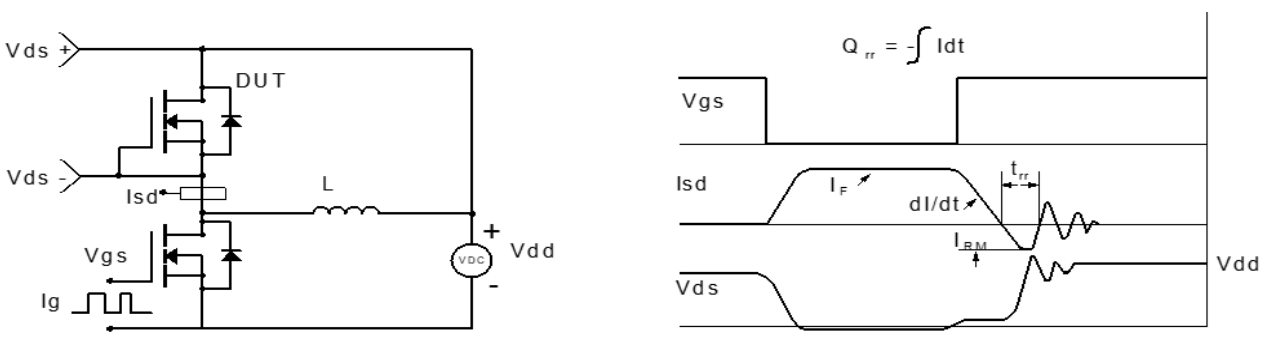

Figure 4: Diode Recovery Test Circuit & Waveform

All product information is copyrighted and subject to legal disclaimers.

Package Mechanical Data(TO-252-3L)

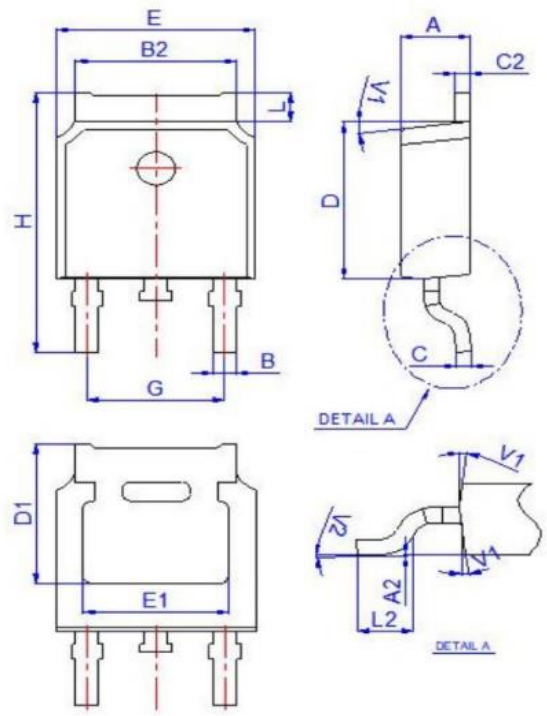

Ref.	Dimensions					
	Millimeters			Inches		
	Min.	Typ.	Max.	Min.	Typ.	Max.
A	2.10		2.50	0.083		0.098
A2	0		0.10	0		0.004
B	0.66		0.86	0.026		0.034
B2	5.18		5.48	0.202		0.216
C	0.40		0.60	0.016		0.024
C2	0.44		0.58	0.017		0.023
D	5.90		6.30	0.232		0.248
D1	5.30REF			0.209REF		
E	6.40		6.80	0.252		0.268
E1	4.63			0.182		
G	4.47		4.67	0.176		0.184
H	9.50		10.70	0.374		0.421
L	1.09		1.21	0.043		0.048
L2	1.35		1.65	0.053		0.065
V1		7°			7°	
V2	0°		6°	0°		6°

Recommended Soldering Footprint

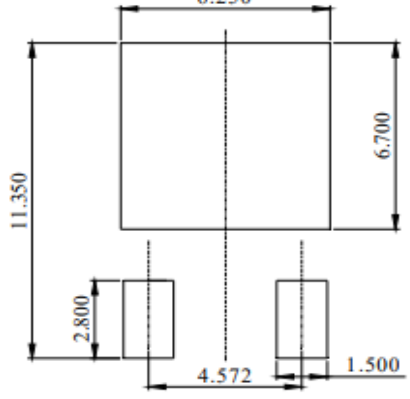

DIMENSIONS:MILLIMETERS

Information furnished in this document is believed to be accurate and reliable.
However, Jiangsu JieJie Microelectronics Co.,Ltd assumes no responsibility for the consequences of use without consideration for such information nor use beyond it.
Information mentioned in this document is subject to change without notice, apart from that when an agreement is signed, Jiangsu JieJie complies with the agreement.
Products and information provided in this document have no infringement of patents. Jiangsu JieJie assumes no responsibility for any infringement of other rights of third parties which may result from the use of such products and information.

is a registered trademark of Jiangsu JieJie Microelectronics Co.,Ltd.